Historic, archived document

Do not assume content reflects current scientific knowledge, policies, or practices.

84 C

LIBRARY
RECEIVED
★ FEB 28 1930 ★
U. S. Department of Agriculture

CIRCULAR NO. 98 JANUARY, 1930
UNITED STATES DEPARTMENT OF AGRICULTURE
WASHINGTON, D. C.

THE WONDERFUL VARIETY OF POMEGRANATE:

COMPOSITION, COMMERCIAL MATURITY, AND BY-PRODUCTS

By E. M. Chace, *Senior Chemist*, C. G. Church and H. D. Poore, *Associate Chemists, Food Research Division, Chemical and Technological Research, Bureau of Chemistry and Soils*

CONTENTS

	Page
The pomegranate industry	1
Plan of investigation	2
Methods of analysis	3
Presentation of the data	3
Discussion:	
Results in 1925	8
Results in 1926	8
Results in 1927	9
Comparison of crops	9
Further data on the composition of pomegranates	10
By-products	12
Types of culls	12
Methods of extracting the juice	12
Preparation of the juice	13
Concentrated juice	14
Jelly	14
Literature cited	15

THE POMEGRANATE INDUSTRY

The pomegranate, *Punica granatum* L., was probably indigenous to Persia, but has been planted throughout the world in semitropic arid regions where irrigation is available. It is mentioned by many ancient writers and was highly regarded by them. Brought to the United States by the Spanish padres, it was planted in many of the mission gardens of California.

In the United States the pomegranate is grown for commercial purposes chiefly in Tulare County, Calif. In 1927 that county had more than 1,200 acres of bearing trees, whereas the rest of the State had less than 400 acres (*6*).[1] Few, if any, commercial plantings exist in other States.

Little is known regarding the history of the commercial variety, the Wonderful, but according to one writer it was introduced from Florida, being planted as a cutting in 1896 at Porterville (*5*). Several variants exist in the groves of the Porterville region.

The demand for the fruit in this country is in the large centers of population where there are colonies of people from the Mediterranean regions. Among people not accustomed to eating the pomegranate, it is used for decorative purposes, or the seed arils are placed in salads for the color effect.

When first marketed, the Wonderful variety of pomegranate brought highly satisfactory returns to the growers. As a result the plantings were increased until the supply of fruit has outgrown the demand, with

[1] Italic numbers in parentheses refer to "Literature cited," p. 15.

91961°—30

the usual disastrous effect on the price. The rapid increase in shipments is shown by Table 1, which gives shipments from Tulare County only.

TABLE 1.—*Shipments of pomegranates from Tulare County, Calif., 1922 to 1928 inclusive*

Year	Quantity	Quantity	Year	Quantity	Quantity
	Boxes	*Carloads*		*Boxes*	*Carloads*
1922	43,217	47	1926	167,788	212
1923	83,382	84	1927	65,922	71
1924	97,460	99½	1928	139,118	151.5
1925	113,304	113½			

In an effort to correct market conditions the growers have adopted standards regulating the quality and maturity of the fruit offered for shipment, and they are attempting to regulate distribution. Undoubtedly these measures are helping the situation, but the industry is still faced with a problem, the only solution of which lies in reducing shipments or increasing consumption. If shipments are reduced, the quality of the fruit will be improved, but a large quantity of sound fruit will be lost unless a by-product industry is established to utilize it.

PLAN OF INVESTIGATION

The investigation reported in this circular had two objects: (1) The establishment of a satisfactory maturity standard; (2) the development of methods for utilizing the surplus and cull fruit. Incidentally data of some value concerning the composition of the fruit were obtained.

During the first season (1925) that the work was carried on, samples were obtained September 11, September 23, and October 15. It was thought that nearly all the samples collected on the first date would be immature, that 10 days later about half the fruit would have become edible, and that by the middle of October all the fruit would be mature except that from locations which were abnormal for this fruit. It was to be expected that the fruit from trees growing on heavy soil and those with insufficient irrigation would be late in maturing.

Trees were selected throughout the pomegranate district from Jasmine in Kern County on the south to Merryman's in the Exeter district of Tulare County on the north, and samples of 12 fruits each were collected on the above-mentioned dates. Samples were composed of average fruits collected from all sides of the tree with approximately relative numbers of outside and inside fruit. They were taken to Los Angeles for analysis.

For the most part the second year's work consisted in testing the conclusions drawn from data obtained the previous season, and investigating the feasibility of a color standard for the juice. Nearly all the second-year samples passed a reasonable acid or sugar test, but the fruit was so poor in inside color as to give the impression to buyers that it was immature. The work was continued for about three weeks, from September 12 to 30. Some samples were obtained from the trees from which samples came the year before, but most of

them were submitted by the county horticultural inspectors or extension agents.

The final season's work consisted in the practical application of both the acid and color standards which had been adopted as a result of the first two seasons' efforts. A few preliminary samples were obtained on September 15 and analyzed at Los Angeles. Field operations lasted from September 28 to October 4, most of the samples being brought to the laboratory by inspectors and growers. Juice of the samples that came from trees the fruit of which had been previously analyzed was preserved and taken to the Los Angeles laboratory, where total sugars were determined. Specific gravity, acid, and color determinations were made in the field.

METHODS OF ANALYSIS

The methods of analysis were those of the Association of Official Agricultural Chemists. Specific gravity determinations were made with a Brix spindle that had been compared with a standard spindle (*1, p. 102, No. 5*). Sugars were determined by the Munson and Walker method (*1, p. 78, No. 24*), modified by dissolving cuprous oxide in ferric sulphate and sulphuric acid. The ferrous sulphate was titrated with permanganate solution. Acidity was titrated with standard solutions of sodium hydroxide, 1 cubic centimeter being equivalent to 10 milligrams of anhydrous citric acid. Titrations were made at room temperature, phenolphthalein being used as an indicator. The end points were satisfactory, since the brilliant red of the juice disappears as the neutral point is approached.

Color determinations at the laboratory were made by matching the juice in ¼-inch cells against standard Lovibond glasses. In the field the tests were made by comparing the juice with a special dye solution prepared at the laboratory. When viewed in ¼-inch cells this solution was equivalent in color to the Lovibond glasses 20 Red plus 1 Yellow.

PRESENTATION OF THE DATA

The data obtained by these analyses are given in Tables 2, 3, and 4, respectively, for the seasons of 1925, 1926, and 1927. In Table 2 the data are grouped in sets showing the results on samples from the same tree. The averages of the samples according to the date of picking are given and also results on a few miscellaneous samples where the sets are not complete. Table 5 gives the results on five sets of samples taken from the same trees during each of the three seasons. Other data that throw light on the composition of the pomegranate are included.

TABLE 2.—*Composition of pomegranate juice, season of 1925*

REGULAR SAMPLES (SETS INCLUDE FRUIT FROM ONLY ONE TREE)

Laboratory No.	Date picked	District	Soluble solids	Acid	Total sugars	Sucrose	Sugar in soluble solids	Ratio soluble solids/acid
			Per cent	*Per cent*	*Per cent*	*Per cent*	*Per cent*	
1	Sept. 11	Porterville	18.74	2.06	14.42	0.70	76.95	9.1
34	Sept. 23	do	19.31	1.68	15.70	.47	81.31	11.5
49	Oct. 15	do	19.71	1.28	16.40	.30	83.21	15.4
2	Sept. 11	do	16.93	2.13	13.06	.62	77.14	7.9
33	Sept. 23	do	17.97	1.79	14.24	.31	79.24	10.0
57	Oct. 15	do	18.21	1.56	14.80	.23	81.27	11.7
3	Sept. 11	do	16.57	2.17	12.59	.50	75.98	7.6
36	Sept. 23	do	17.07	1.61	13.82	Trace.	80.96	10.6
50	Oct. 15	do	17.24	1.21	14.52	.30	84.22	14.2
4	Sept. 11	do	17.17	2.39	12.71	.58	74.02	7.2
35	Sept. 23	do	17.94	1.58	14.55	.54	81.10	11.4
58	Oct. 15	do	18.57	1.35	15.43	.23	83.09	13.8
5	Sept. 11	do	17.33	1.89	13.77	.62	79.46	9.2
38	Sept. 23	do	17.80	1.68	14.02	Trace.	78.76	10.6
56	Oct. 15	do	18.34	1.50	15.11	.47	82.39	12.2
6	Sept. 11	do	16.50	2.15	12.44	.46	75.39	7.7
37	Sept. 23	do	17.31	1.46	14.02	.54	80.99	11.9
59	Oct. 15	do	17.53	1.06	14.67	.30	83.69	16.5
7	Sept. 11	do	16.43	2.36	12.28	.43	74.74	7.0
25	Sept. 23	do	17.51	1.81	13.96	Trace.	79.73	9.7
47	Oct. 15	do	18.63	1.75	15.17	.38	81.43	10.6
8	Sept. 11	do	18.14	2.62	13.33	.39	73.48	6.9
29	Sept. 23	do	18.93	2.19	14.67	.31	77.50	8.6
67	Oct. 15	do	19.01	1.85	14.93	0	78.54	10.3
9	Sept. 11	Strathmore	16.67	2.75	11.79	Trace.	70.73	6.1
41	Sept. 23	do	17.33	2.39	12.81	.31	73.92	7.2
66	Oct. 15	do	17.91	1.82	14.02	Trace.	78.28	9.8
10	Sept. 11	do	17.07	2.54	12.35	0	72.35	6.7
42	Sept. 23	do	17.59	2.22	12.95	.30	73.62	7.9
65	Oct. 15	do	17.64	1.57	13.95	Trace.	79.08	11.2
11	Sept. 11	do	17.10	2.50	12.84	0	75.09	6.8
28	Sept. 23	do	18.00	2.07	13.36	--------	74.22	8.7
53	Oct. 15	do	18.24	1.53	14.80	.32	81.14	11.9
12	Sept. 11	do	16.19	2.61	11.64	.24	71.90	6.2
27	Sept. 23	do	17.11	2.30	12.84	Trace.	75.04	7.4
48	Oct. 15	do	17.99	1.27	14.98	.23	83.27	14.2
13	Sept. 11	do	16.01	2.54	11.49	Trace.	71.77	6.3
45	Sept. 23	do	16.97	2.17	13.01	Trace.	76.66	7.8
61	Oct. 15	do	18.17	2.13	14.15	.23	77.88	8.5
15	Sept. 11	do	16.83	2.26	13.02	Trace.	77.36	7.4
26	Sept. 23	do	17.41	1.83	13.94	.30	80.07	9.5
51	Oct. 15	do	17.64	1.53	14.34	.47	81.29	11.5
16	Sept. 11	do	17.17	1.81	13.88	.31	80.84	9.5
44	Sept. 23	do	17.73	1.36	14.19	--------	80.03	13.0
52	Oct. 15	do	18.24	0.89	15.21	.24	83.39	20.5
17	Sept. 11	Porterville	16.73	2.13	12.94	0	77.35	7.8
30	Sept. 23	do	17.43	1.66	13.88	Trace.	79.63	10.5
68	Oct. 15	do	17.81	1.29	15.08	Trace.	84.67	13.8
18	Sept. 11	Terra Bella	17.99	2.49	13.32	.69	74.04	7.2
40	Sept. 23	do	18.23	2.10	13.82	.23	75.81	8.7
54	Oct. 15	do	19.01	1.71	15.29	.69	80.43	11.1
71	Nov. 9	do	20.04	1.59	16.32	Trace.	81.44	12.6
19	Sept. 11	do	16.53	2.13	12.86	Trace.	77.80	7.8
39	Sept. 23	do	17.57	1.77	13.85	.38	78.83	9.9
64	Oct. 15	do	18.84	1.61	15.18	Trace.	80.57	11.7
20	Sept. 11	do	16.83	2.38	12.60	Trace.	74.87	7.1
32	Sept. 23	do	17.61	1.80	13.79	Trace.	78.31	9.8
63	Oct. 15	do	18.07	1.36	14.80	.30	81.90	13.3
21	Sept. 11	do	16.39	2.19	12.46	Trace.	76.02	7.5
31	Sept. 23	do	16.89	2.00	13.00	.23	76.97	8.4
60	Oct. 15	do	17.79	1.96	13.94	Trace.	78.36	9.1
	Sept. 11	Average	16.97	2.31	12.79	--------	75.36	7.4
	Sept. 23	Average	17.69	1.87	13.82	--------	78.14	9.6
	Oct. 15	Average	18.23	1.51	14.84	--------	81.40	12.6

TABLE 2.—*Composition of pomegranate juice, season of 1925*—Continued

MISCELLANEOUS SAMPLES

Laboratory No.	Date picked	District	Soluble solids	Acid	Total sugars	Sucrose	Sugar in soluble solids	Ratio soluble solids/acid
			Per cent	*Per cent*	*Per cent*	*Per cent*	*Per cent*	
14	Sept. 11	Strathmore	16.64	2.47	12.37	Trace.	74.34	6.7
23	Sept. 23	Exeter and Merryman	17.50	1.92				9.1
22	do	do	17.31	1.98	13.38	0.47	77.30	8.7
62	Oct. 14	do	18.09	1.60	14.73	.24	81.43	11.3
70	Nov. 7	do	17.99	1.81	14.25	.24	79.21	9.9
43	Sept. 25	Kern County	17.63	2.03	13.54	Trace.	76.80	8.7
55	Oct. 13	do	17.94	1.40	14.97	.39	83.44	12.8
69	Nov. 7	do	18.19	1.73	14.71	.31	80.87	10.5
72	Dec. 24	do	17.63	1.36	14.66	.30	83.15	13.0
24	Sept. 23	Exeter and Merryman	16.26	1.95				8.3
46	do	do	16.61	1.41	13.66	.47	82.24	11.8
		Averages of all samples	17.63	1.88	13.88		78.54	10.0

TABLE 3.—*Composition of pomegranate juice, season of 1926*

Sample No.	District and date picked	Soluble solids	Acid	Ratio soluble solids/acid	Color of juice (per cent of standard color)
	Sept. 12–18	*Per cent*	*Per cent*		
75	Strathmore	17.07	1.55	11.0	
76	Lindsay	17.47	1.62	10.8	
77	Strathmore	17.97	1.32	13.6	
78	Kern County	17.79	1.47	12.1	
79	Terra Bella	17.63	1.30	13.6	
80	do	16.39	1.53	10.7	
81	do	18.43	1.68	11.0	
82	do	18.03	1.82	9.9	
83	Strathmore	17.21	1.44	11.9	
84	do	17.31	1.38	12.5	
85	Exeter and Merryman	17.83	1.60	11.1	
86	Porterville	17.26	1.55	11.1	
87	do	17.66	1.68	10.5	125
88	Strathmore	17.46	1.29	13.5	62.5
89	do	17.26	1.40	12.3	55
90	Lindsay	17.16	1.38	12.4	75
91	do	16.96	1.55	10.9	50
	Average	17.46	1.50	11.7	73.5
	Sept. 19–25				
92	Porterville	17.83	1.64	10.9	75
93	Exeter and Merryman	17.71	1.17	15.1	50
94	do	17.31	1.68	10.3	100
95	do	17.51	1.46	12.0	75
96	Lindsay	17.37	1.55	11.2	150
97	do	16.87	1.93	8.7	125
98	do	17.67	1.51	11.7	75
99	do	17.47	1.81	9.7	125
100	Porterville	17.93	1.67	10.7	125
101	do	18.47	2.17	8.5	125
102	Strathmore	17.83	1.56	11.4	80
103	Lindsay	17.73	1.23	14.4	40
104	Strathmore	17.33	1.55	11.2	75
105	Lindsay	17.27	1.57	11.0	125
106	do	17.07	1.49	11.5	75
107	Porterville	17.67	2.13	8.3	125
108	do	17.63	1.29	13.7	100
109	do	17.83	1.68	10.6	100
110	do	17.70	2.28	7.8	125
111	do	19.00	1.26	15.1	75
113	do	17.87	1.77	10.1	125
114	do	18.03	2.22	8.1	140
115	Strathmore	16.93	1.57	10.8	100
116	do	18.23	1.26	14.5	90
117	do	17.13	1.42	12.1	100

TABLE 3.—*Composition of pomegranate juice, season of 1926*—Continued

Sample No.	District and date picked	Soluble solids	Acid	Ratio soluble solids/acid	Color of juice (per cent of standard color)
		Per cent	*Per cent*		
118	Exeter and Merryman	17.43	1.38	12.6	100
119	do	18.13	1.79	10.1	100
120	Kern County	18.03	1.77	10.2	150
121	Terra Bella	17.69	1.34	13.2	90
122	Porterville	17.99	1.49	12.1	90
123	Lindsay	17.43	1.55	11.2	100
124	do	16.99	1.48	11.5	75
125	do	17.64	1.62	10.9	90
126	do	16.87	1.51	11.2	115
127	do	17.03	1.29	13.2	62.5
128	Porterville	17.63	1.42	12.4	125
129	Lindsay	18.13	1.54	11.8	125
130	do	17.26	1.75	9.8	125
131	do	16.79	1.25	13.4	90
132	do	16.93	1.29	13.1	125
	Average	17.58	1.58	11.4	101.6
	Sept. 26–30				
133	Exeter and Merryman	18.30	1.84	9.9	60
134	Strathmore	17.43	1.06	16.4	100
135	Porterville	17.80	1.62	11.0	75
136	Strathmore	17.29	1.34	12.9	75
137	Lindsay	17.23	1.68	10.3	115
138	do	17.13	1.61	10.6	140
139	Porterville	17.86	1.75	10.2	150
140	Exeter and Merryman	16.96	1.21	14.0	90
141	Porterville	17.80	1.70	10.5	180
142	do	17.13	1.48	11.6	140
143	Terra Bella	18.28	1.56	11.7	100
144	Porterville	17.93	1.14	15.7	75
145	Terra Bella	18.28	1.21	15.1	75
146	do	17.56	1.45	12.1	50
147	do	18.99	1.32	14.4	75
148	Porterville	17.58	1.51	11.6	93
149	do	17.33	1.62	10.7	75
150	do	17.40	1.12	15.5	55
151	Lindsay	17.30	1.70	10.2	125
152	Strathmore	16.90	1.50	11.3	100
153	Lindsay	17.10	1.18	14.5	80
154	do	16.70	1.29	12.9	37.5
155	Kern County	18.74	1.39	13.5	132
156	Terra Bella	18.01	1.92	9.4	86
157	Kern County	17.71	1.49	11.9	178
158	do	18.24	1.79	10.2	200
159	Terra Bella	18.51	1.19	15.6	139
160	Kern County	18.01	1.19	15.1	109
161	Terra Bella	18.01	1.17	15.4	71
162	Kern County	17.04	1.27	13.4	125
163	Porterville	18.30	1.62	11.3	150
164	Strathmore	17.90	1.64	10.9	178
165	do	17.87	1.40	12.8	125
166	do	17.44	1.16	15.0	139
167	do	17.84	1.40	12.7	139
169	Exeter and Merryman	17.70	1.58	11.2	125
170	Strathmore	17.20	1.53	11.2	139
171	do	17.44	1.31	13.3	150
172	do	17.74	1.34	13.2	109
173	do	17.67	1.44	12.3	125
174	do	17.24	1.40	12.3	100
175	Exeter and Merryman	18.24	1.56	11.7	100
176	Strathmore	17.80	1.60	11.1	150
177	Porterville	17.87	1.51	11.8	125
178	Lindsay	16.51	1.37	12.1	100
	Average	17.67	1.45	12.5	112
	Average for year	17.60	1.51	11.9	105

TABLE 4.—*Composition of pomegranate juice, season of 1927* [1]

Sample No.	Date picked	District	Soluble solids	Acid	Total sugars	Ratio soluble solids/acid	Color of juice (relation to standard)
			Per cent	*Per cent*	*Per cent*		
179	Sept. 15	Strathmore	16.63	2.27	12.63	7.33	Above.
180	do	do	16.47	2.20	12.54	7.49	Do.
181	do	Terra Bella	17.13	2.22	12.87	7.72	Below.
182	do	Kern County	17.37	2.57		6.76	Above.
		Average	16.90	2.32	12.68	7.32	
183	Sept. 28	Kern County	18.74	1.91	15.12	9.81	Do.
184	do	Terra Bella	17 34	2.02	13.99	8.58	Do.
185	Sept. 29	Strathmore	17.77	1.57		11.32	Do.
186	do	do	17.37	1.67		10.40	Do.
187	do	do	17.44	1.82		9.58	Do.
188	do	do	16.51	1.64		10.07	Do.
189	do	do	16.77	1.97	13.21	8.51	Do.
190	do	do	17.07	1.70	13.84	10.04	Do.
191	do	do	16.97	1.69		10.04	Do.
192	do	Kern County	15.83	1.61		9.83	Do.
193	do	Terra Bella	17.87	1.81		9.87	Do.
194	do	do	17.67	1.73		10.21	Do.
195	Sept. 30	Porterville	17.87	2.10		8.51	Do.
196	do	do	17.37	1.59		10.92	Do.
197	do	do	17.33	1.75		9.90	Do.
198	do	Strathmore	16.49	2.11		7.82	Do.
199	do	do	16.36	1.58		10.35	Do.
200	do	do	16.69	2.17		7.69	Do.
201	do	do	17.33	1.86		9.32	Do.
202	do	Porterville	17.79	1.75		10.17	Do.
203	do	Strathmore	16.54	1.80		9.19	Do.
204	do	do	17.17	1.91		8.99	Do.
205	do	Terra Bella	18.07	1.86		9.72	Do.
206	do	Strathmore	17.57	1.65		10.65	Do.
207	do	do	16.17	1.78		9.08	Do.
208	do	do	16.99	1.89		8.99	Do.
209	do	do	17.23	1.69		10.20	Do.
210	do	do	17.42	2.15		8.10	Do.
211	Oct. 1	Porterville	16.71	1.61		10.38	Do.
212	do	do	17.76	1.47		12.08	Do.
213	do	Strathmore	16.14	1.62	13.34	9.96	Do.
214	do	Exeter and Merryman	17.27	1.96	14.07	8.81	Do.
		Average	17.18	1.80	13.93	9.66	Do.
216	Oct. 2	Strathmore	17.27	1.88		9.19	Do.
215	Oct. 3	do	16.53	1.52		10.88	Do.
217	do	do	16.67	1.65		10.10	Do.
218	do	do	17.84	1.69		10.56	Do.
219	do	do	17.43	1.93		9.03	Do.
221	do	do	16.83	1.94	13.99	8.68	Do.
222	do	do	17.04	2.24		7.61	Do.
223	do	do	18.57	1.93		9.62	Do.
224	Oct. 4	do	16.63	1.53		10.87	Do.
226	do	do	17.64	1.96		9.00	Do.
		Average	17.24	1.83	13.99	9.55	
		Average for year	17.17	1.85	13.56	9.43	

[1] Analytical work was done by D. G. Sorber of this laboratory.

TABLE 5.—*Comparison of pomegranate samples from same trees*

Sample No. and Year	Date picked	Soluble solids	Acid	Total sugars	Ratio soluble solids/acid
1925		*Per cent*	*Per cent*	*Per cent*	*Per cent*
21	Sept. 11	16.39	2.19	12.46	7.5
43	Sept. 23	17.63	2.03	13.54	8.7
31	Sept. 23	16.89	2.00	13.00	8.4
41	Sept. 23	17.33	2.39	12.81	7.2
22	Sept. 23	17.31	1.98	13.38	8.7
Average		17.11	2.12	13.04	8.1
1926					
82	Sept. 16	18.03	1.82		9.9
120	Sept. 24	18.03	1.77		10.2
143	Sept. 28	18.28	1.56		11.7
138	Sept. 27	17.13	1.61		10.6
133	Sept. 27	18.30	1.84		9.9
Average		17.95	1.72		10.5
1927					
181	Sept. 15	17.13	2.22	12.87	7.7
183	Sept. 28	18.74	1.91	15.12	9.8
184	Sept. 28	17.34	2.02	13.99	8.5
189	Sept. 29	16.77	1.97	13.21	8.5
214	Oct. 1	17.27	1.96	14.07	8.8
Average		17.45	2.02	13.85	8.7

DISCUSSION

RESULTS IN 1925

From Table 2 it will be seen that there is a gradual increase of soluble solids and sugar and a loss of acid as the season progresses. The increase of sugar is relatively more rapid than that of soluble solids, resulting in an increased percentage of sugar in the solids as shown in column 8. The increase of soluble solids and decrease of acid also results in marked increases in the soluble solids-acid ratios shown in column 9. Sucrose is sometimes present in small quantities, ranging from traces to 1 per cent.

In fruit from a single tree the difference between the maximum and minimum percentage of solids was 2.31 per cent; of sugar, 3.35 per cent; and of acid, 1.34 per cent. Considering the quantity present, the acid undergoes relatively the greatest change. In the taste of the juice, acid and sugar are the controlling factors. As a rule, fruits having little acid are rich in sugars. In view of these points and the fact that the acidity could readily be determined by the inspectors and shippers who had had experience in making solids-acid ratio determinations on orange juice, it was decided to base the maturity standard on the quantity of acid present. This limit naturally would be somewhere near the average of the second set of samples, as it appeared from experience that about half the fruit at that time was fit to ship. The maximum finally decided upon was 1.85 per cent, and this percentage was made the tentative standard for trial by the growers themselves.

RESULTS IN 1926

The fruit of the 1926 crop was different from that obtained in 1925. Although the first samples were collected before September 15, all passed the tentative standard of 1.85 per cent acid, and the fruit was of

good eating quality. The color of the seed arils, however, was so light as to create the impression that the fruit was immature, and the first few carloads placed on the market brought heavy losses to the growers. In order to prevent the shipment of fruit of this character, the shippers suggested that a color standard be included in the maturity regulations. A committee finally selected fruit with the minimum inside color that was thought to be satisfactory. The juice from this fruit was carefully matched against a dye solution, and then preserved by sterilization. A few weeks later both dye solution and juice were matched with glasses of the Lovibond scale and found to be equivalent to the 20 Red plus 1 Yellow. This figure therefore was set as the standard for color of the juice.

The juice of nearly all samples collected during the season was matched with a standard dye solution that was later matched with the standard glasses or an equivalent dye solution. The figures given in the last column of Table 3 indicate roughly the relation between the juice and the standard. Those above 100 indicate a color deeper than the standard; those below, a lighter color.

It will be noted that the color does not correlate with the acid; many of the sourest fruits yielded a deep-colored juice. Apparently, as is the case with most other fruits, color is not a reliable index of maturity, at least as far as eating quality is concerned.

The change in composition throughout this season was much less than during the previous one. This no doubt was partly a seasonal factor, but the method of collecting samples was also to some extent responsible, as inspectors naturally brought in samples from groves that were about ready for harvesting. Fruit from two trees sampled three times during the season, however, did not show the uniform increase of solids and decrease of acid shown by the samples of the previous year.

RESULTS IN 1927

The method of taking samples in 1927 was the same as that followed in 1925 and 1926. The data merely show the average composition of the fruit when its maturity is still questionable. During this season the juices of all samples were compared with the color standard, but the only record made was whether or not the color was deeper or lighter. With a single exception all samples were deeper in color. The sample that failed to pass also failed to meet the requirement for acid. Two other samples (Nos. 188 and 207) were about equal to the standard in color, but both were below the acid requirement.

COMPARISON OF CROPS

Table 5 gives the results on fruit from the same trees for each of the three seasons during which the work was done. As the samples were collected at approximately the same time each season, the data indicate roughly the relative maturities of the crops.

The 1925 crop was the latest-maturing crop of the three. In most samples of this crop the average soluble solids were lower and the acid was higher than in fruit of either of the other seasons at corresponding dates. The 1926 crop matured the earliest of the three, the average soluble solids, with one exception, being higher and the acid lower than was that of the other crops at the corresponding dates. In the 1926 crop, however, the color of the seed

arils was exceedingly pale, and few samples reached the required color until the acidity of the samples was well within the standard. The data for 1927 show that this crop probably matured about as early as the 1925 crop but later than the 1926 crop.

FURTHER DATA ON THE COMPOSITION OF POMEGRANATES

Table 6 shows in detail the composition of the Wonderful variety of pomegranate.

TABLE 6.—*Composition of the Wonderful pomegranate* [1]

Item	Whole fruit [2]	Juice [3]
Total solids, per cent	23.83	
Grams per 100 cubic centimeters		20.02
Water insoluble solids, per cent	7.42	
Total sugar as invert, per cent	13.59	
Grams per 100 cubic centimeters		16.87
Nonsugar solids, per cent	10.24	
Grams per 100 cubic centimeters		3.15
Alcohol precipitate, per cent	.233	
Grams per 100 cubic centimeters		.016
Pectic acid, per cent	.072	0
Acidity:		
Cubic centimeters N/10 per 100 grams	163.4	
Cubic centimeters N/10 per 100 cubic centimeters		238.1
Citric acid, per cent	1.02	
Grams per 100 cubic centimeters		[4] 1.52
Malic acid, per cent	None.	
Ash, per cent	.472	
Grams per 100 cubic centimeters		.469
Water soluble ash, per cent	.401	
Grams per 100 cubic centimeters		.437
Alkalinity of water soluble ash, cubic centimeters N/10 per 100 grams	42.0	45.2
Alkalinity number of total ash, cubic centimeters N/1 per 1 gram ash	11.7	11.3
Phosphoric acid:		
Milligrams per 100 grams	27.55	
Milligrams per 100 cubic centimeters		17.6
Per cent of ash	5.83	3.75
Calcium oxide (CaO):		
Milligrams per 100 grams	17.4	
Milligrams per 100 cubic centimeters		7.5
Per cent of ash	3.7	1.6
Magnesium oxide (MgO):		
Milligrams per 100 grams	17.1	
Milligrams per 100 cubic centimeters		8.0
Per cent of ash	3.6	2.14
Potash (K_2O):		
Calculated from alkalinity of water soluble ash—		
Milligrams per 100 grams	197.4	
Milligrams per 100 cubic centimeters		212.4
Milligrams per 100 grams	238.8	
Milligrams per 100 cubic centimeters		262.3
Per cent of ash	50.6	55.9
Chlorine (Cl):		
Milligrams per 100 grams	50.3	
Milligrams per 100 cubic centimeters		52.4
Per cent of ash	10.6	11.2
Sulphur (S):		
Milligrams per 100 grams	5.72	
Milligrams per 100 cubic centimeters		4.0
Per cent of ash	1.21	.85

[1] Analytical work was done by Mrs. Doris H. Tilden, of the Food, Drug, and Insecticide Administration.
[2] Arils containing juice.
[3] Undiluted cold pressed juice from the arils.
[4] Calculated from acidity.

Parsons (*9*) analyzed two varieties of pomegranates from Georgia. The results of these analyses, and the data obtained by Balland (*2*) on another pomegranate sample are given in Table 7.

TABLE 7.—*Analyses of pomegranates by Parsons and Balland*

Variety	Water	Sugar			Acidity	SO_3	Protein	Ether extract	Crude fiber	Ash
		Invert	Cane sugar	Total						
	Per cent	*Per cent*	*Per cent*	*Per cent*	*Per cent*	*Per cent*	*Per cent*	*Per cent*	*Per cent*	*Per cent*
Sweet [1]	78.27	11.61	1.04	--------	0.37	--------	1.33	1.24	2.63	0.76
Sour [1]	75.41	10.40	.26	--------	1.85	--------	1.60	2.05	2.83	.54
Not specified [2]	84.20	--------	--------	10.10	--------	0.220	.59	.15	2.91	.29

[1] Analyzed by Parsons. [2] Analyzed by Balland.

The fresh peel of the pomegranate contains some pectin, one sample having 2.73 per cent. A sample of dried peel contained 25 per cent of tannin, equivalent to about 8 per cent in the undried peel.

The juice of the pomegranate appears to be not unlike the juice of other fruits that are low in pectin. Nelson (*8*) found the acidity of the juice of the Wonderful variety to be wholly due to citric acid. Analysis of a large quantity of juice from the Porterville district gave the following results: Solids (Brix at 17½°), 17.50 per cent; solids (vacuum at 70° C.), 17.13 per cent; invert sugar, 13.79 per cent; sucrose, 0.14 per cent; citric acid, 1.47 per cent; protein (N×6.25), 0.23 per cent; ash, 0.42 per cent. Table 8 shows the composition of the juice of pomegranates from several localities. (*7, v. 1, p. 887.*)

TABLE 8.—*Composition of 100 cubic centimeters of pomegranate juice*

Locality	Solids	Invert sugar	Citric acid	Malic acid	Protein	Ash
	Grams	*Grams*	*Grams*	*Grams*	*Grams*	*Grams*
Sicily [1]	15.04	13.69	0.37	--------	--------	0.28
Teramo [1]	--------	7.81	3.04	--------	1.04	--------
Do.[1]	--------	11.33	3.36	0.082	--------	--------
Naples [1]	--------	10.50	.51	--------	--------	--------
Portici [1]	--------	11.45	.49	.106	--------	--------
Do.[1]	--------	11.78	.51	.114	--------	--------
Cherchell [2]	--------	15.60	19	--------	--------	--------

[1] Bornträger, A. and Paris, G., (*3, p. 158*). [2] Balland, (*2, p. 92*).

Data on the composition of the husks and seeds as determined by Balland (*2*) are presented in Table 9.

TABLE 9.—*Composition of husks and seeds of pomegranates*

Portion	Water	Protein	Fat	Nitrogen-free extract	Crude fiber	Ash
	Per cent	*Per cent*	*Per cent*	*Per cent*	*Per cent*	*Per cent*
Husk	32.80	0.88	0.46	40.01	15.25	1.00
Seeds	60.60	4.50	5.87	11.73	11.94	.96

BY-PRODUCTS

The work on by-products, which began some time before the subject of standardization was raised, at first was confined to preservation of the juice. As reported in the California Citrograph (*4*, *10*), the Florida Grower (*4*), and the Beverage Journal (*4*, *10*), it was found that pomegranate juice was not only a satisfactory beverage but that it blended well with other juices, improving the appearance of the mixture by its desirable color. At first it was not found necessary to remove the tannin since the juice was from thoroughly ripe fruit, but later when commercial culls were used, the removal of the tannin by gelatin was desirable. Where fruit direct from the trees is available for the preparation of the juice, the fruit can be left on the tree until most of the tannin has disappeared. If packing-house culls are to be used, the tannin is best separated by means of gelatin, although the fruit can be stored on an open platform so that the skins will dry to a leathery consistency, after which the juice coming in contact with them does not take up much tannin. If an economical method could be found for removing and pressing the seed arils without contamination by the skins, the quantity of tannin in the juice would be too small to render it astringent.

TYPES OF CULLS

In commercial practice the packing-house culls are carefully sorted before being pressed. Usually the fruits are cut into two or more pieces in order that any affected with heart rot may be rejected.

Heart rot is a fungous disease that probably enters the blossoms. By the time the fruit is mature, it has caused more or less of the pulp to become putrid. Such fruits are not edible and should not be used in preparing juice. Heart rot, if well developed, can be readily identified by the corrugated appearance of the skin and mottled color above the affected area. Where the diseased area is small, the fruit shows little if any evidence of the disturbance, and it is discovered only after cutting.

Another source of loss to the grower is sunburn. This defect is correlated with a brown spot on the skin above the area affected. This spot often cracks part way through the skin but seldom splits the fruit. The seed arils beneath the spot are light in color, usually white, but the juice does not seem to be greatly affected, the sugar and acid content being approximately the same as in sound fruit. It is not necessary, therefore, to discard these fruits from stock intended for making juice.

Many pomegranates split during growth. The greatest loss to growers is through this defect, sometimes more than half the fruit on the tree being lost. Many explanations and remedies have been offered, but up to the present none seems to be satisfactory. When split fruits have not rotted and are free from fungus, there seems no reason why they can not be used in making juice. Usually split fruit is mature, and its juice is of good quality.

METHODS OF EXTRACTING THE JUICE

The yield of juice from pomegranates is somewhat higher than would be expected from the appearance of the fruit. By removing and pressing the arils as much as 108 gallons of juice from a ton of

fresh fruit have been obtained. No satisfactory commercial methods for this purpose have been devised, and the fruit is usually halved or quartered, and pressed in a hydraulic press or a press of some other type. By this method from 80 to 90 gallons of juice from a ton of fresh fruit are usually obtained.

A press for pomegranates, devised by W. E. Sutton of this laboratory, gives satisfactory results. It is a continuous feed and discharge type press, and extracts the juice as successfully as do the usual hydraulic types. A drawing of the press is shown in Figure 1.

This press consists of a plunger, P, given a reciprocating motion by means of a motor-driven pulley, A, through pinion and spur gears, B, crank shaft, C, and connecting rod, D. Fruit is fed into the device through the hopper, L, as the plunger recedes, and the juice is pressed out as the plunger advances. The pressure is regulated by opening or closing the discharge aperture by means of the leaf, F, hinged at G. This is done by adjusting the bolts, E. In

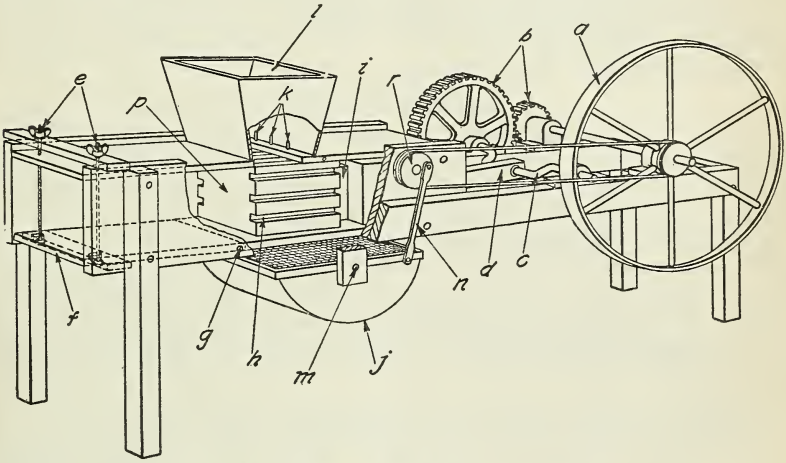

FIGURE 1.—Press for extracting pomegranate juice

order to facilitate the discharge of the juice, grooves, H, are cut in the sides of the plunger, P. These grooves are kept free from débris by pegs, K, so that the flow of juice to the vertical grooves, I, is unimpeded. The juice and fine particles of the skin fall through the floor of the press to the rocking sieve, J. This screening device consists of a silver-plated 80-mesh copper sieve hung at the pivot, M, rocked by the arm, N, and attached to the small pulley, R, which is belt-driven from the main shaft. The screen collects the fine particles of débris in small spheres and discharges them at the lower end of the screen. The juice, freed from a large part of the solid particles, drops through the screen into the receptacles below.

PREPARATION OF THE JUICE

Preliminary filtration can be omitted when gelatin is to be used for removing the tannin. The juice from the press is placed in 50-gallon barrels, and one-quarter pound of gelatin previously dissolved in a small quantity of hot water is added to each barrel. The barrels are allowed to stand about three hours, after which

the clear juice is siphoned from them. The juice is then mixed with 1 per cent of its weight of kieselguhr and heated to 175° F. After it has stood overnight it is filtered cold and sterilized in bottles or in a continuous pasteurizer at 175° to 180°.

The residue from which the juice has been siphoned can also be filtered with kieselguhr, after which it is treated according to the process just described for the juice. When this scheme of treatment is used the juice will keep brilliant for six months and sediment in objectionable quantities will not deposit within a year. If desired, the juice can be sweetened, but this should be done before it is filtered, as unfiltered commercial sugar solutions are seldom brilliant.

The above-mentioned method saves time when the juice goes into immediate consumption. When the juice is to be stored for some time in bulk, it is best to add the gelatin and sterilize the raw product at 170° to 175° F. in a continuous sterilizer, running the hot juice into recently sterilized hot 5 to 9 gallon carboys. Close with recently boiled or heated cork stoppers and place in cold storage until needed. Before this juice is bottled for consumption it should be filtered with kieselguhr as described above. It may then be bottled, and will remain brilliant for many months.

CONCENTRATED JUICE

In order to avoid the high cost of shipping, many fruit juices are concentrated before they are packed. In the experimental work pomegranate juice from which the tannin had been removed was used. In a small silver-plated vacuum pan under 28 to 28½ inches of vacuum the unsweetened juice was concentrated to a sirup having about one-quarter its original volume; that is, with total solids of about 73 per cent. If the soluble solids of the original juice are raised to 25 per cent by the addition of cane sugar, the evaporation can be stopped at one-third the original volume. Both these products can be bottled directly from the vacuum pan without further pasteurizing.

A sample having 73 per cent solids was kept loosely corked on the laboratory shelves for 22 months without signs of fermentation or mold growth, and when diluted was only slightly inferior to fresh juice. A sample containing 64 per cent solids kept loosely corked showed signs of mold in 6 weeks, and one of 50 per cent solids molded in 16 days. The two last-mentioned samples lost some color and flavor, but the sample containing 73 per cent solids was only slightly inferior in color and flavor after 22 months.

In order to standardize the product it is recommended that the solids of the raw juice be raised by adding cane sugar until the soluble solids reach 25 per cent. On evaporating to about one-third its volume, this produces a splendid concentrate without appreciable loss in color or taste.

JELLY

A satisfactory jelly with fruity flavor and high color can be made from pomegranate juice. Either the undiluted or the concentrated juice can be used, but the latter should be diluted to about 25 per cent solids before being used. As the juice contains little or no pectin, that substance must be supplied from other sources. If liquid pectins are used, the directions given for berry or grape jellies should be followed. Dry pectin is usually standardized so that 1

pound will jelly 100 pounds of sugar. The hundred pounds of sugar should include the 13 to 14 per cent of sugar which the juice naturally contains. Often it is difficult to dissolve the dry pectin, but if the pectin is mixed with part of the sugar and sifted slowly into the boiling mixture of juice and sugar, no difficulty in this respect is encountered.

For small batches the following plan has been used: To 4 pounds of juice add 3½ pounds of sugar. Heat to boiling and boil for 4 minutes in order to invert the cane sugar. Mix 1 ounce of dry pectin with one-half pound of sugar, being sure that all lumps of pectin are broken down and that the mixture is uniform. Add this mixture to the boiling juice and sugar, stirring the sirup very slowly Boil for one minute after addition is complete, allow to cool some what, skim, and pour into hot glasses.

LITERATURE CITED

(1) Association of Official Agricultural Chemists.
1921. official and tentative methods of analysis. revised to nov. 1, 1919. 417 p., illus., Washington, D. C.

(2) Balland.
1900. composition et valeur alimentaire des principaux fruits. Rev. Internatl. Falsif. 13: 92–100.

(3) Bornträger, A., and Paris, G.
1898. analyse der granatäpfel. Ztschr. Untersuch. Nahr. u. Genussmtl. 1: 158–163.

(4) Chace, E. M.
1920. a method for the clarification and preservation of fruit juices. Calif. Citrog. 5: 264–265, 267, illus. (Also published in Fla. Grower 21: 8 illus. 1920; and in Beverage Jour. 56 (5): 235–236, illus. 1921.).

(5) Hodgson, R. W.
1917. the pomegranate. Calif. Agr. Expt. Sta. Bul. 276, 192 p., illus.

(6) Kaufman, E. E.
1927. california crop report for 1926. Calif. Dept. Agr., Mo. Bul. 15: 216–258.

(7) König, J.
1903–19. chemie der menschlichen nahrungs- und genussmittel. Ed. 4, 3 v. Berlin.

(8) Nelson, E. K.
1927. the non-volatile acids of the pear, quince, apple, loganberry, blueberry, cranberry, lemon, and pomegranate. Jour. Amer. Chem. Soc. 49: 1300–1302.

(9) Parsons, C. L.
1888. analysis of some southern fruits with reference to their food values. Amer. Chem. Jour. 10: 487–488.

(10) Poore, H. D.
1922. notes on pomegranate and rhubarb juices. Calif. Citrog. 8: 46. (Also published in Beverage Jour. 58 (9): 76, 78, 80.)

ORGANIZATION OF THE UNITED STATES DEPARTMENT OF AGRICULTURE

January 14, 1930

Secretary of Agriculture	ARTHUR M. HYDE.
Assistant Secretary	R. W. DUNLAP.
Director of Scientific Work	A. F. WOODS.
Director of Regulatory Work	WALTER G. CAMPBELL.
Director of Extension Work	C. W. WARBURTON.
Director of Personnel and Business Administration.	W. W. STOCKBERGER.
Director of Information	M. S. EISENHOWER.
Solicitor	E. L. MARSHALL.
Weather Bureau	CHARLES F. MARVIN, *Chief.*
Bureau of Animal Industry	JOHN R. MOHLER, *Chief.*
Bureau of Dairy Industry	O. E. REED, *Chief.*
Bureau of Plant Industry	WILLIAM A. TAYLOR, *Chief.*
Forest Service	R. Y. STUART, *Chief.*
Bureau of Chemistry and Soils	H. G. KNIGHT, *Chief.*
Bureau of Entomology	C. L. MARLATT, *Chief.*
Bureau of Biological Survey	PAUL G. REDINGTON, *Chief.*
Bureau of Public Roads	THOMAS H. MACDONALD, *Chief.*
Bureau of Agricultural Economics	NILS A. OLSEN, *Chief.*
Bureau of Home Economics	LOUISE STANLEY, *Chief.*
Plant Quarantine and Control Administration	LEE A. STRONG, *Chief.*
Grain Futures Administration	J. W. T. DUVEL, *Chief.*
Food, Drug, and Insecticide Administration	WALTER G. CAMPBELL, *Director of Regulatory Work, in Charge.*
Office of Experiment Stations	————, *Chief.*
Office of Cooperative Extension Work	C. B. SMITH, *Chief.*
Library	CLARIBEL R. BARNETT, *Librarian.*

This bulletin is a contribution from

Bureau of Chemistry and Soils	H. G. KNIGHT, *Chief.*
Chemical and Technological Research	C. A. BROWNE, *Chief.*
Food Research Division	F. C. BLANCK, *Chief.*
Laboratory of Fruit and Vegetable Chemistry.	E. M. CHACE, *Chemist, in Charge.*

U. S. GOVERNMENT PRINTING OFFICE: 1930

For sale by the Superintendent of Documents, Washington, D. C. - - - - - Price 5 cents